somfy	16/10/09 SUNILUS 50 SCREEN io 17rpm TECHNICAL DATA MOTOR	SDEV-CLU-IMPS 61R0 SDEV- FICA 90R0 SUNILUS 50 SCREEN io 17rpm Range 1

Type of head	Star Head
Nominal voltage	230 V - 50 Hz
Power supply tolerances	205-255 V AC
Thermal time	4 minutes
Number of wires of the cable	3
Wire section	0,75 mm²
Type of limit switch unit	Electronic
Capacity of the LSU	241 turns
Repeatability	< ± 5°
System of protection	IP 44
Interface drawings	Screw implantation for LT50 mounting 206810-Wheel interface LT50 206821-Crown interface LT50 206822-Interface drawing star head LT50 and LT50PA/PS 206823
Radio frequency	868-870 Mhz (tri band)
Coding	Code with a minimum of 2^{48} possibilities
Capacity of memory	Maxi 9 for 1W transmitter - infinite for 2W transmitters
Antenna	Integrated
Range	20 m with 2 reinforced concrete walls to be passed through Possibilty to enhance radio range thanks to a Repeater
R&TTE (Radio Equipement and Telecommunications Terminal Equipement Directive)	http://www.somfy.com/ce/index.cfm
Principle	The principle of the Sunilus io is to motorize vertical screen application without cassette with the io-Homecontrol protocol
Basic crown for tube Ø	50 x 1,5 mm
Temperature working range	80% of life time between -10°C to +40°C 20% of life time between -20°C to +70°C

	Nm	rpm		mm	mm	mm	W	A	kg	mm	°C		dBA
Designation	**Nominal torque**	**Nominal speed**	**Reference**	**L1 max.**	**L2** (±3 mm)	**L3 max.**	**Rated power**	**Rated current**	**Weight**	**tube**	**Thermal tripping**	**Brake type**	**Noise**
SUNILUS SCREEN 50 io 6/17	**6**	**17**	5065237	605	590	613	90	0,45	1,85	540	140	Sliding	47
SUNILUS SCREEN 50 io 10/17	**10**	**17**	5065238	655	640	663	120	0,5	1,985	590	140	Sliding	47
SUNILUS SCREEN 50 io 15/17	**15**	**17**	5065239	655	640	663	140	0,65	2,12	590	150	Sliding	50

somfy	16/10/09 SUNILUS 50 SCREEN io 17rpm TECHNICAL DATA MOTOR	SDEV-CLU-IMPS 61R0 SDEV- FICA 90R0 SUNILUS 50 SCREEN io 17rpm Range 1

Neutral	Blue
Live	Brown
Earth	Green / Yellow

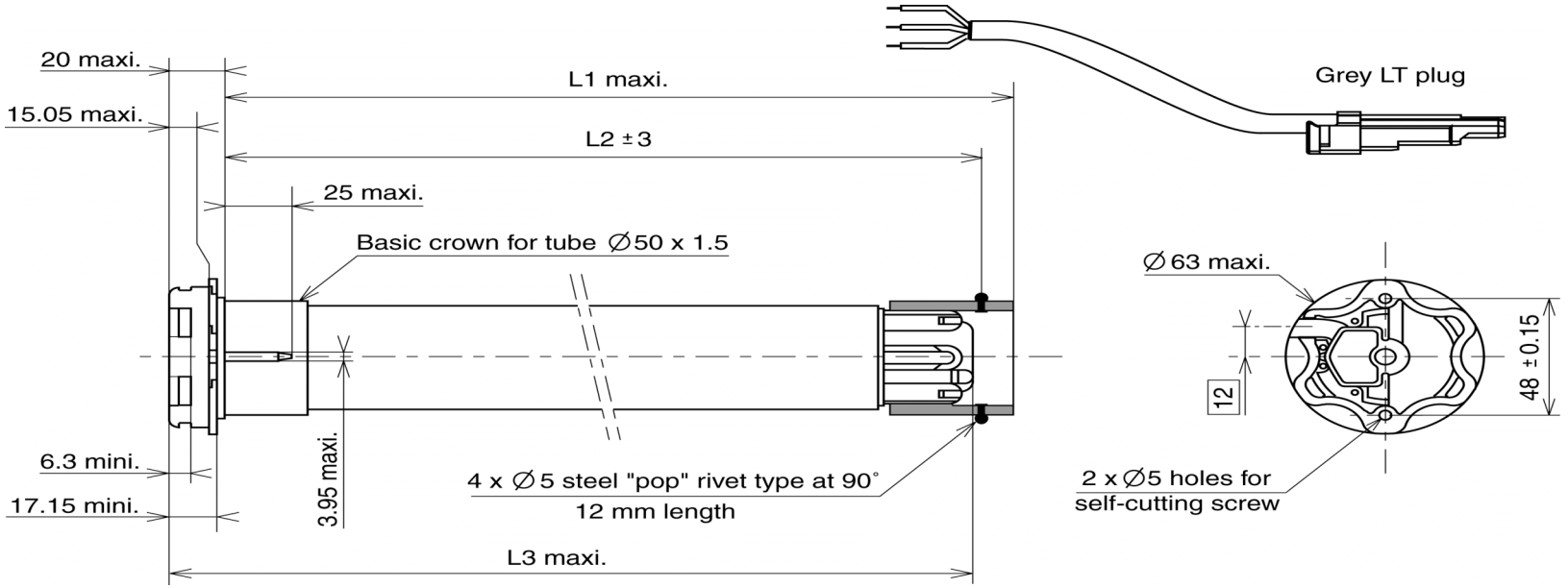

	R&D	QUALITY	EDITOR
Name Date	B. Chauvet	C. Belin	C. Louet